ALFA43XMFDS

Family	Professional ovens
Subfamily	Multifunction oven 4 trays 435x320 mm
Oven type	Multifunction oven
Oven control	Manual
Trays capacity	4 trays 435x320 mm
Power supply	230 V~ / 13 A / 3,0 kW / 50 Hz
Program storage with application	Not available
Maximum depth with open door	993 mm
Adjustable feet	Yes
Net weight	36,100 kg
Product dimensions WxDxH	602x580x537 mm

Target

Solutions	Coffee shops/Wine bars; Hotels; Restaurants/Pubs; Bakery/Pastry making; Frozen bakery industry; Food retail

Aesthetics

Colour	Stainless steel	**Front panel**	Yes
Door with stainless steel stripes	Yes	**Logo**	Smeg printed

Controls

Timer setting range	1-60 minutes + endless

Programme / Functions

Backing functions

- Convection
- Up & base
- Fan assisted base
- Large grill

Adjustable fan speed

Double speed fan

Accessories Included

Aluminized tray 3820	kit of 4 pieces

Electrical Connection

Plug	(F;E) Schuko

Construction

Oven materials	Stainless steel / glass / plastics
Cavity dimensions (wxdxh)	460x360x425 mm
Cavity material	Ever Clean enamel
Shelves number	4
Tray frame support	Chromed wire
Shelves distance	80 mm
Door construction	Triple glass
Door opening	Tilting
Handle type	Fixed
Glass	With clip
Fan type and number	Fan with fixed rotation
Fan motor power	Dual speed
Engine rpm	Dual speed
Motor rpm in standard speed	2700 rpm
Motor rpm in low speed	2100 rpm
Exhaust position	Back
Timer type	Electric
Temperature range	50-270°C
End cooking signal	Yes
Orange light indicator t° achievement	Yes
Green light indicator time achievement	Yes
Manual reset safety thermostat	Yes
Removable deflector	Yes
Lighting	1 Halogen lamp
Light power	40 W
Power cable length	115 cm
Back panel	Galvanized
IPX protection	IPX3

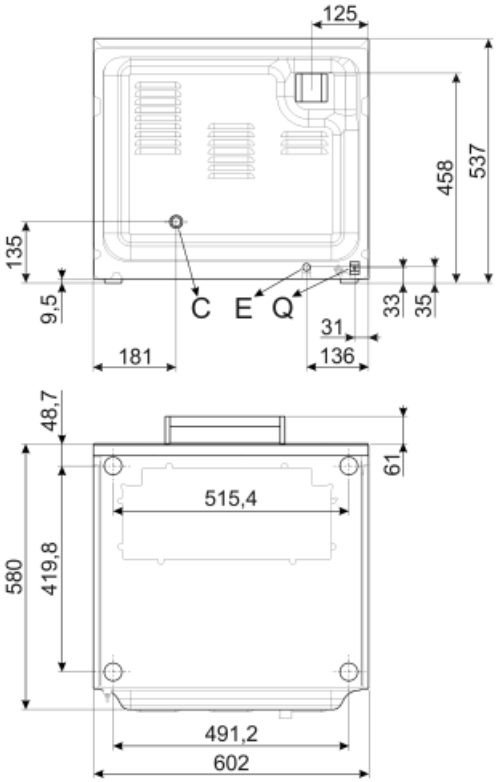

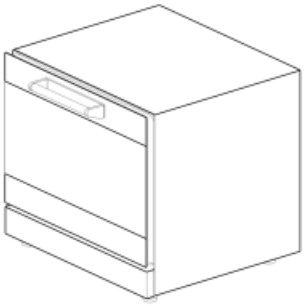

Q	MORSETTO EQUIPOTENZIALE EARTH TERMINAL
E	CAVO ALIMENTAZIONE ELETTRICA ELECTRICITY SUPPLY CABLE
C	TUBO DI CARICO *(solo su alcuni modelli)* FILLER HOSE *(on some models only)*

Not included accessories

3820

Flat aluminised steel tray (4pcs)

Symbols glossary (TT)

Fan with lower element

Fan forced heating

Large grill heating element

Static heating with upper and lower elements

Double speed fan